Fisher Engineering
50 Gordon Drive, Rockland, Maine 04841-2139 • www.fisherplows.com

44685-1, 44695-1
44775-2, 44785-1
44795-1, 85000, 85500

March 1, 2022
Lit. No. 49596, Rev. 11

Blade and Off-Truck Kit

XtremeV™ Snowplow

Parts List

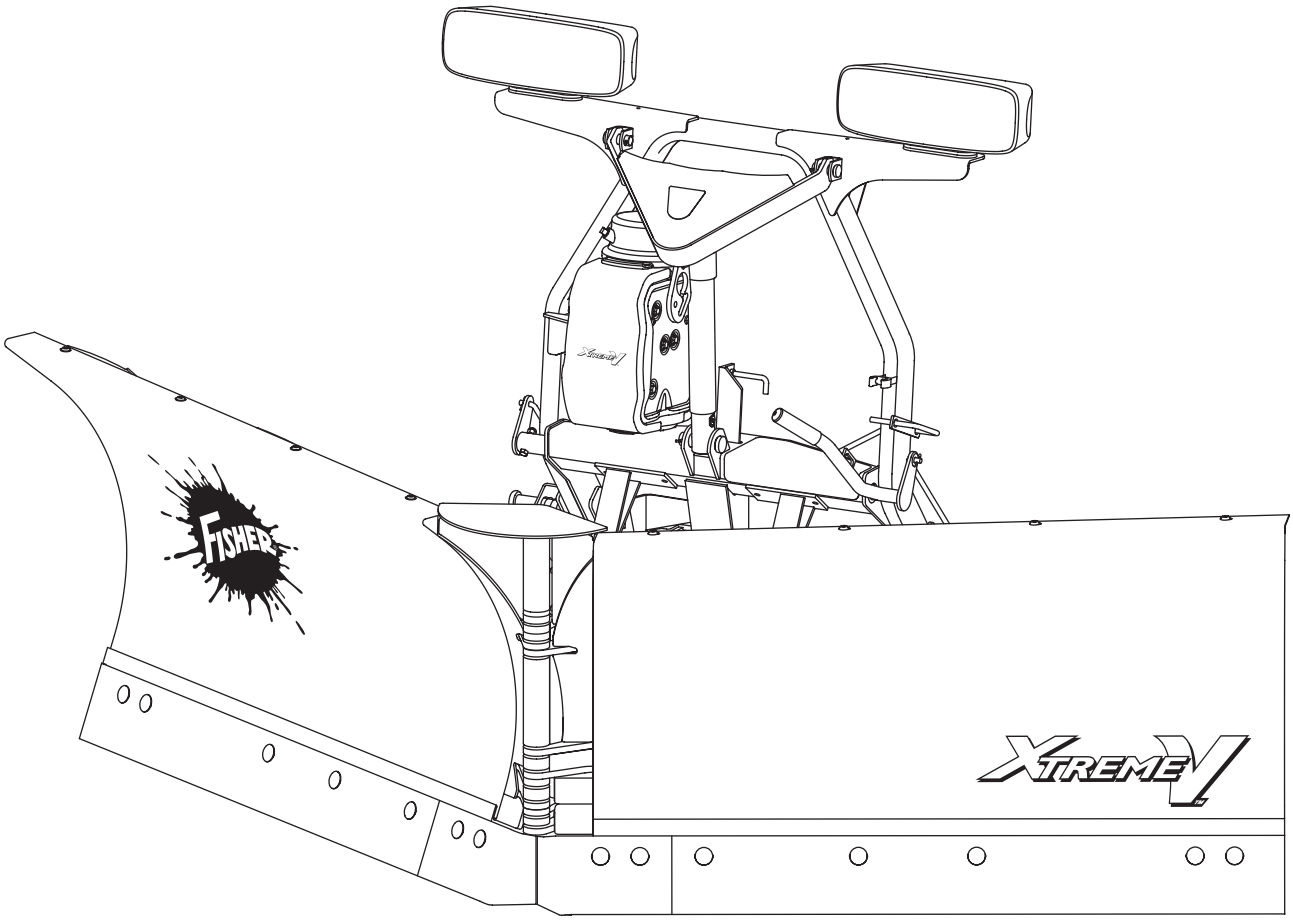

XtremeV™ BLADES 4
XtremeV OFF-TRUCK KITS 6
Headgear and T-Frame 6
Hydraulic Unit 8
Cover Assembly 10
Lift and Angle Rams 11
Hoses and Fittings 11
Electrical Components 12
Vehicle-Side Wiring Diagram 13
Headlamp Kit 14

BLADE COMPONENTS – 9'6" SHOWN

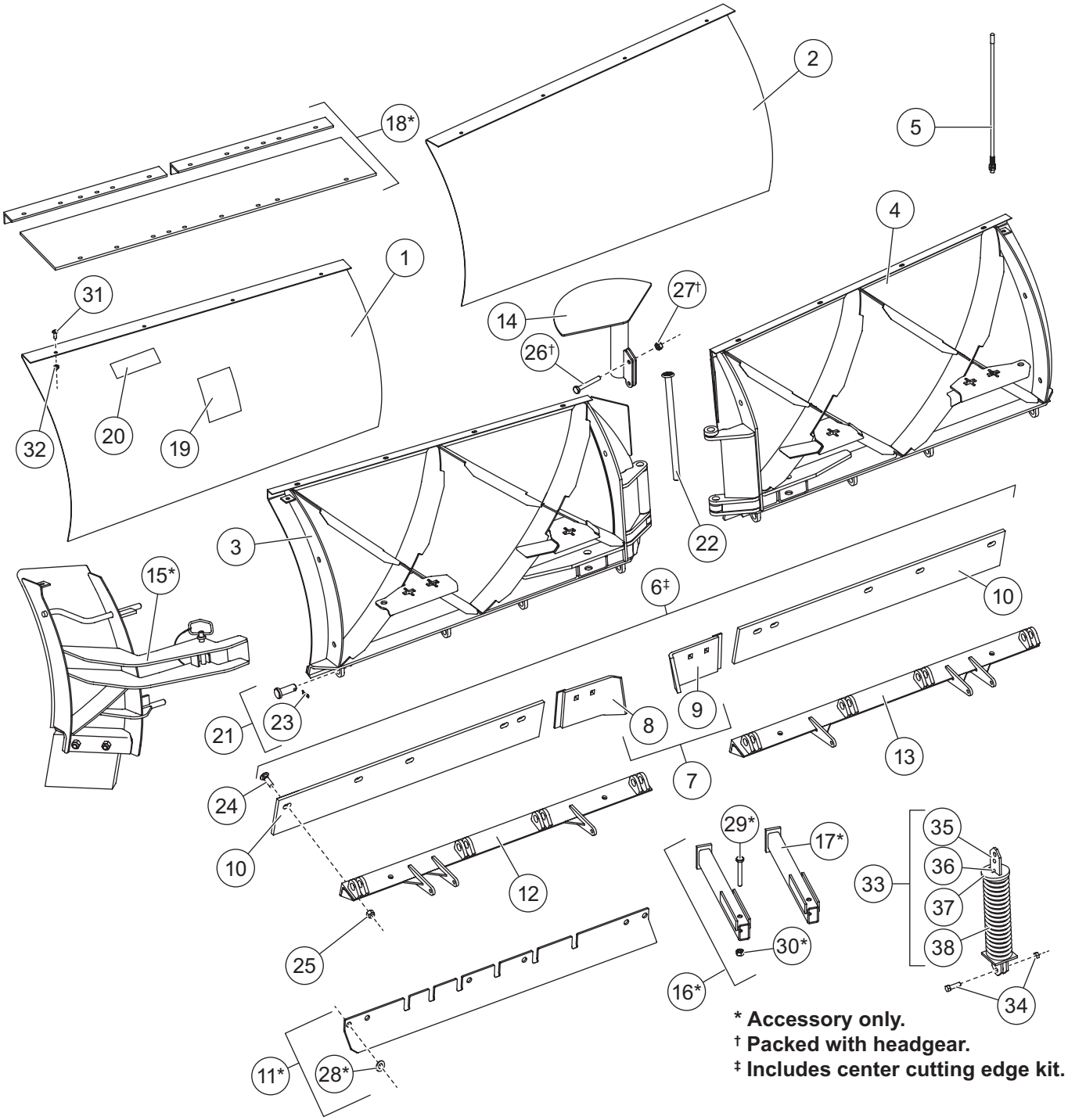

* Accessory only.
† Packed with headgear.
‡ Includes center cutting edge kit.

44685-1/44695-1/44775-2/44785-1/44795-1 XtremeV™ Blade Components						
		Part Number				
Item	Description	7'6" SS	8'6" MS	8'6" SS	9'6" MS	9'6" SS
1	Moldboard Kit – DS	44822	44824	44826	44828	44830
2	Moldboard Kit – PS	44823	44825	44827	44829	44831
3	Frame, Base Angle & Springs – DS	44745	44746		44747	
4	Frame, Base Angle & Springs – PS	44748	44749		44750	
5	Flexible Blade Guide Set – 26"	27195				
6‡	Cutting Edge Kit w/Fasteners (3/8")	44740-2	44741-2		–	
	Cutting Edge Kit w/Fasteners (1/2")	44742-2*	44743-2*		44744-2	
	Cutting Edge Kit w/Fasteners (5/8")	–	85361*		85362*	
7	Center Cutting Edge Kit w/Fasteners	44894-1				
	Center Cutting Edge Kit w/Fasteners (5/8")	85357*				
8	Center Cutting Edge – DS	44891-1				
	Center Cutting Edge (5/8") – DS	85351*				
9	Center Cutting Edge – PS	44890-1				
	Center Cutting Edge (5/8") – PS	85352*				
10	Cutting Edge (3/8")	44896-1	44897		–	
	Cutting Edge (1/2")	44996-1*	44997*		44898	
	Cutting Edge (5/8")	–	85355*		85356*	
11*	Back Drag Edge Kit	44281-4	44282-3		44283-4	
12	Base Angle – DS	40340	40342		44110-1	
13	Base Angle – PS	40341	40343		44111-1	
14	Snow Control	44570			44571	
15*	Blade Wing Extension Kit	–	44610-1			
16*	Blade Stop Kit	44473				
17*	Outrigger	44036				
18*	Rubber Deflector Kit	44710				
19	Label – Warning/Caution, Snowplows	59900				
20	Label – Logo, STORM GUARD™ (MS)	–	26211	–	26211	–
ns	Label – Logo, FISHER® Splatter	20238				
ns	Label – Identity, XtremeV	44464				
ns	Blade Label Kit – V-Plows	42490*				

MS = Mild Steel SS = Stainless Steel ns = not shown

* Accessory only. ‡ Includes center cutting edge kit.

Springs and Fasteners											
			Qty						Qty		
Item	Part	Description	7'6"	8'6"	9'6"	Item	Part	Description	7'6"	8'6"	9'6"
21	27241	1 x 2-3/4 Clevis Pin w/Cotter	6	8	8	32		3/8-16 x 1 Hex Locknut			
22	44028	V-Plow Pivot Pin	1	1	1		91333	For Mild Steel Moldboards	–	8	8
23		1/4 x 1-3/4 Cotter Pin	8	8	8		95410	For Stainless Steel Moldboards	8	8	8
24		5/8-11 x 2 Carriage Bolt G5	14	14	14	33	21452	Removable Spring Assembly	4	4	6
25		5/8-11 Hex Locknut GB	14	14	14	34	40905	Shoulder Bolt w/Locknut	4	4	6
26†		3/8-16 x 1-1/4 Hex Cap Screw G5	2	2	2	35	21450	Removable Spring Bar	4	4	6
27†		3/8-16 Hex Locknut GB	2	2	2	36	20181	1/4 x 1-1/4 Pin	4	4	6
28*	63927	5/8 Flat Washer Type A Narrow	14	14	14	37	20191	Removable Spring Disc	4	4	6
29*	90109	1/2-13 x 4-1/2 Hex Cap Screw G5	2	2	2	38	5323	Trip Spring	4	4	6
30*	91335	1/2-13 Hex Locknut GB	2	2	2	ns	44763	Bolt Bag – Cutting Edge Kits (one side – 5 sets of fasteners)	2	2	2
31		3/8-16 x 1 Button Cap Screw									
	98043	For Mild Steel Moldboards	–	8	8	ns	44790*	Bolt Bag – Rubber Deflector	1	1	1
	98035	For Stainless Steel Moldboards	8	8	8						

ns = not shown * Accessory only. † Packed w/headgear. G = Grade

Headgear and T-Frame Components

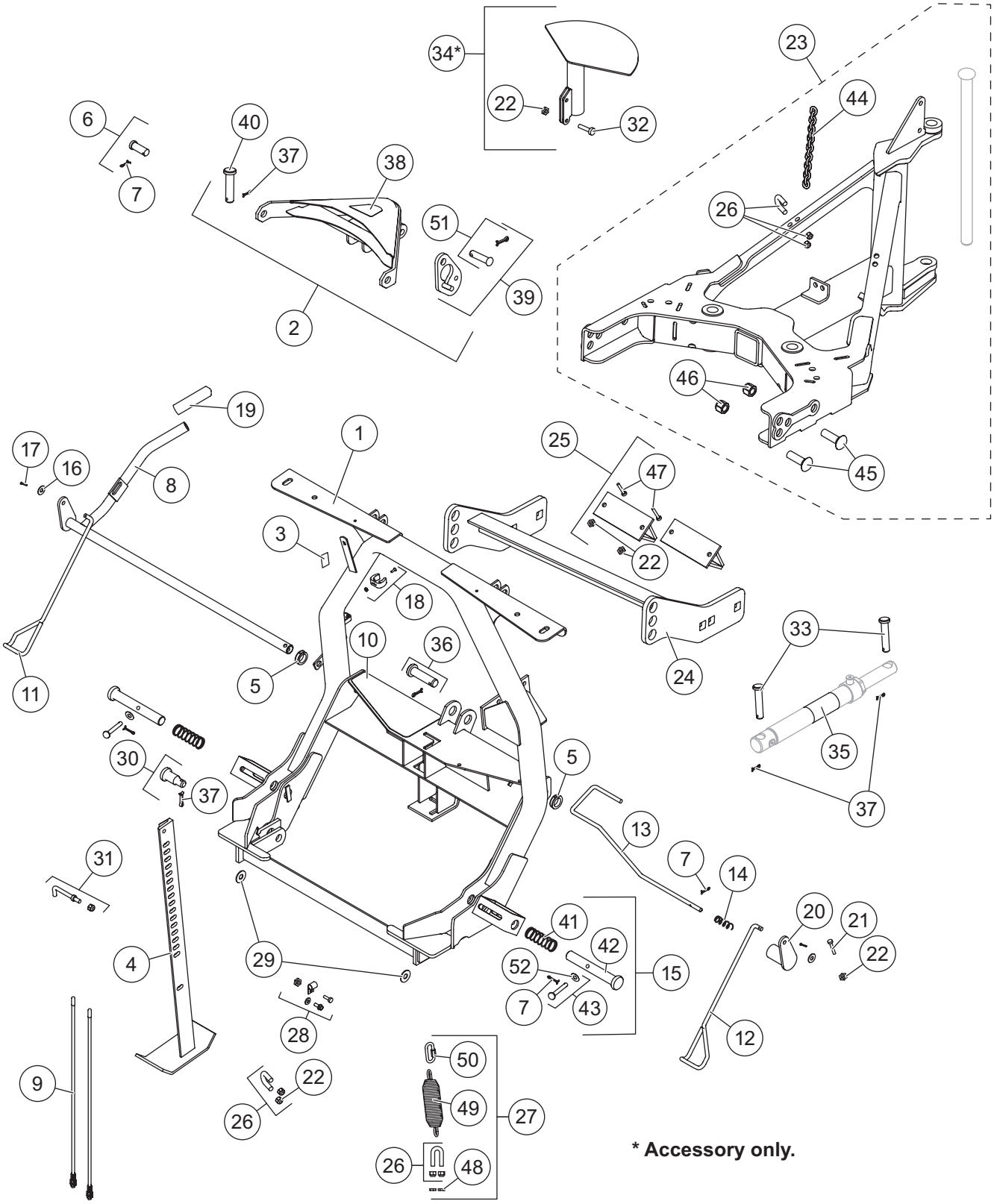

XtremeV™ Headgear and T-Frame Components							
Item	**Part**	**Qty**	**Description**	**Item**	**Part**	**Qty**	**Description**
1	44558-2	1	Headgear	21	90043	1	3/8-16 x 2 Hex Cap Screw G5
2	28350-2	1	Lift Arm Service Kit (yellow)	22	91333	1	3/8-16 Hex Locknut GB
	27560-2	1	Lift Arm Service Kit (silver)	23	44555-2‡	1	T-Frame Service Kit
3	69689	1	Label – Logo, SECURITY GUARD™	24	44556-2	1	Push Assembly
4	27462	1	Jack	25	50632	1	Stacking Stop – Short (shown)
5	27163K	1	Bushing Kit (pkg of 2)		44554	1	Stacking Stop – Long (not shown)
6	4289K	2	3/4 x 2 Machine Pin Packet	26	A6148K	1	U-Bolt Assembly Packet
7	90658	5	5/32 x 1-1/4 Cotter Pin	27	49521	1	Spring/U-Bolt/Link Kit
8	27468	1	Handle-Link Arm Assembly	28	27172K	1	Clamp Loop Kit
9	27195	1	Flexible Blade Guide Set 26"	29	91192	2	Round Flat Washer
10	27451	1	Label – Attach/Detach, MM2 Headgear	30	27177K	2	Step Pin Kit
11	27166K	1	Wire Cam Kit – DS	31	27164K	1	Handle Kit
12	27167K	1	Wire Cam Kit – PS	32	66456	2	3/8-16 x 1-1/4 Hex Cap Screw G5
13	27478	1	Jack Lock	ns	90459‡	4	3/4-10 x 2-1/2 Hex Cap Screw G5
14	27461	1	Compression Spring, 3/4 OD x 3-1/2	33	22260	4	1 x 4-3/4 Clevis Pin
15	27168K	2	Connecting Pin Kit	34*	44570	1	Snow Control, 7'6" and 8'6"
16	90315	4	3/8 Flat Washer Type A Wide		44571*	1	Snow Control, 9'6"
17	91902	1	1/8 x 1 Cotter Pin	35	48847	2	Label – Identity, InstaLock Cylinder
18	27162K-1	1	Stop Clip Kit	36	43603	1	1 x 3-3/4 Clevis Pin Kit
19	27535	1	Handle Cover Kit	37	90601	4	1/4 x 1-1/2 Cotter Pin
20	27465	1	Link Arm				
Item 2			**28350-2 (yellow) / 27560-2 (silver) Lift Arm Service Kit**				
37	90601	1	1/4 x 1-1/2 Cotter Pin	39	28991	1	Stop Link Kit
38	26777	1	Nameplate – Logo, Minute Mount® 2	40	95720	1	1 x 3-5/16 Clevis Pin HT
Item 6			**4289K 3/4 x 2 Machine Pin Packet**				
		1	3/4 x 2 Machine Pin	7	90658	1	5/32 x 1-1/4 Cotter Pin
Item 15			**27168K Connecting Pin Kit**				
41	821	2	Compression Spring, 1 ID x 3-1/2	43	26219	2	Clevis Pin Kit
42	26833	2	1 x 6-15/16 Pin				
Item 23			**44555-2‡ T-Frame Service Kit**				
		1	T-Frame	44	27912-1	1	Chain Grade 43, 5/16 x 54
	44028	1	V-Plow Pivot Pin (shown w/blade)	45	69820	4	3/4-10 x 2-1/8 Carriage Bolt G5
26	A6148K	2	U-Bolt Assembly Packet	46	91338	4	3/4-10 Hex Locknut GB
Item 25			**50632 Stacking Stop – Short (shown)**				
		2	Stacking Stop – Short	47	90201	4	3/8-16 x 1 Carriage Bolt G5
22	91333	4	3/8-16 Hex Locknut GB				
Item 27			**49521 Spring/U-Bolt/Link Kit**				
26	A6148K	1	U-Bolt Assembly Packet	49	27074	1	Spring
48	91413	2	3/8-16 Hex Nut G5	50	68340	1	Quick Link
Item 30			**27177K Step Pin Kit**				
		1	Step Pin	37	90601	1	1/4 x 1-1/2 Cotter Pin
Item 34			**44570* (7'6" & 8'6") / 44571* (9'6") Snow Control**				
		1	Snow Control	32	66456	1	3/8-16 x 1-1/4 Hex Cap Screw G5
22	91333	1	3/8-16 Hex Locknut GB				
Item 39			**28991 Stop Link Kit**				
		1	Stop Link	51	29037	1	5/8 x 2-5/8 Clevis Pin Kit HT G8
Item 43			**26219 Clevis Pin Kit**				
		1	Clevis Pin	52	90315	1	3/8 Flat Washer Type A Wide
7	90658	1	5/32 x 1-1/4 Cotter Pin				
ns = not shown			* Packed w/blade.	HT = Heat Treated			G = Grade

‡ Four 3/4-10 x 2-1/2 hex cap screws (PN 90459) are required when pairing T-frame (PN 44555-2) with a push assembly with round holes.

Hydraulic Unit Components

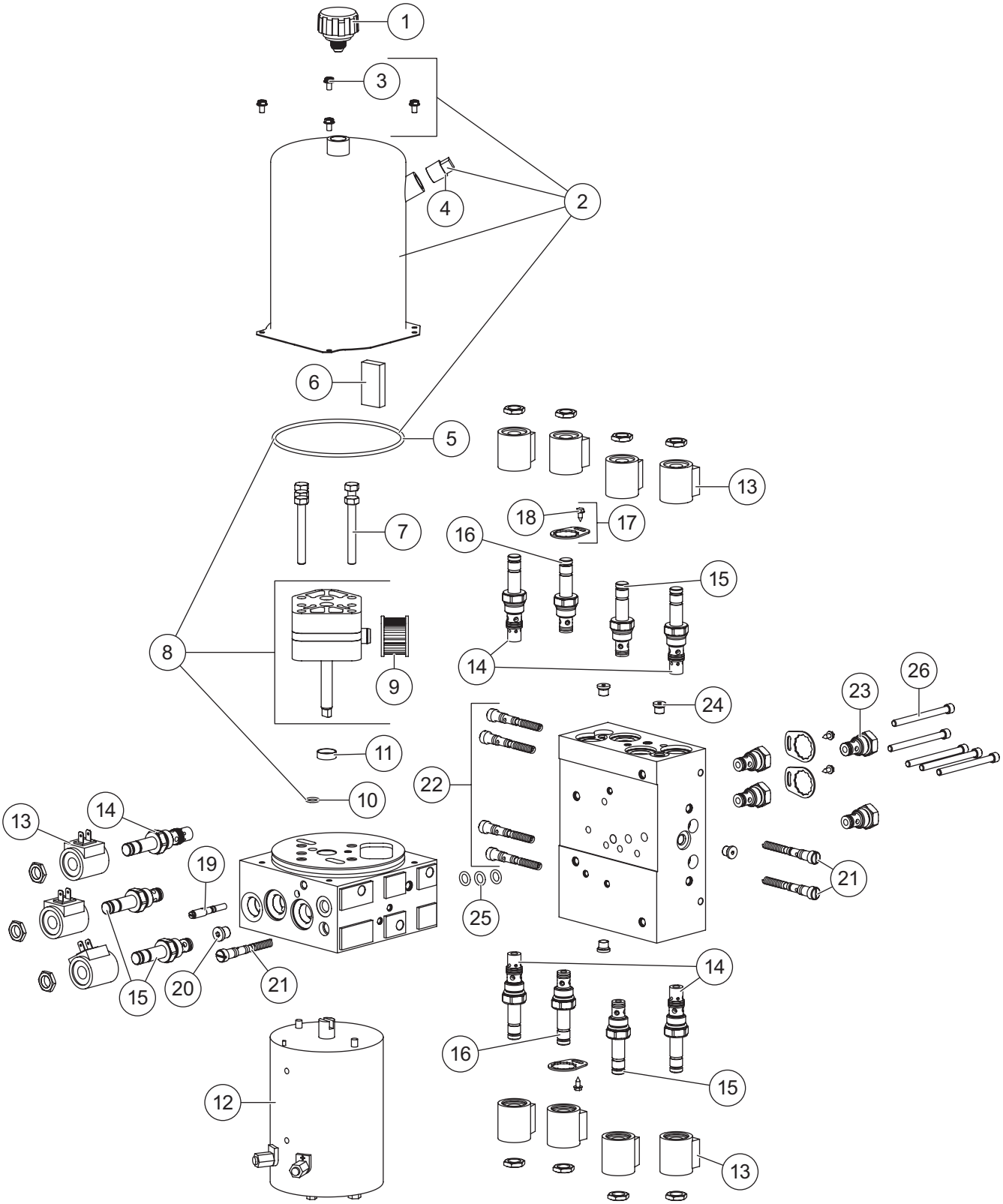

44330 Hydraulic Unit XtremeV™							
Item	**Part**	**Qty**	**Description**	**Item**	**Part**	**Qty**	**Description**
1	21727-2	1	Breather Pressure Control	18	63943	4	#8-18 x 3/8 Tapping Screw
2	44327-3	1	Reservoir Kit	19	56662	1	Quill Assembly 5/16-24 Thread
3	66607	4	#10-24 x 5/16 Machine Screw		48517	1	Quill Assembly 1/2-20 Thread
4	92079	1	Plug, Square 3/8 NPTF	20	44344	1	Plug, Hex Socket –4 M ORB
5	66519	1	O-Ring 2-250	21	7629K-4	1-1/2	Relief Valve Kit (2 sets)
6	73897	1	Magnet	22	44337	2	Relief Valve Kit (2 sets)
7	90080	5	5/16-18 x 2-1/2 Hex Cap Screw G5	23	44333-1	4	Check Valve CV08-20
8	44329-2	1	Pump Kit	24	92960	4	Plug, Hex Socket –3 M ORB
9	26781-4	1	Suction Filter	25	29077	3	O-Ring -110
10	56274	1	O-Ring -013	26	29081	5	1/4-20 x 3 Socket Cap Screw
11	66515	1	Pump Shaft Seal	ns	29099	2	1/4-20 x 1/4 Hex Washer-Head Thread-Rolling Screw
12	21500K-1	1	Motor Assembly 4-1/2				
13	7639K-2	11	Coil w/Spade Terminals	ns	44326	1	1/4-20 x 1/2 6-Lobe Round Washer-Head Screw (pkg of 5)
14	44331	5	Valve SVCV08-20 w/Nut				
15	7634K-2	4	Valve SV08-2004 w/Nut	ns	44355	2	1/4-20 x 5/8 Hex Washer-Head Thread-Rolling Screw
16	44335	2	Valve SF08-2015 w/Nut				
17	44369	4	Valve Lock Ring w/Screw				
O-Ring Service Kits							
–	7632K-5	–	Back-Up/O-Ring Kit (does not contain O-rings for cartridge valves)	–	49259-2	–	Seal Kit, Valves SV08-30, -31, -33, -40, -43, and SVCV 10-20
–	49258-2	–	Seal Kit, Valves SV08-2004, CV08-20, SF08-2015				
ns = not shown				M = Male			G = Grade

Hydraulic Unit Cover Assembly

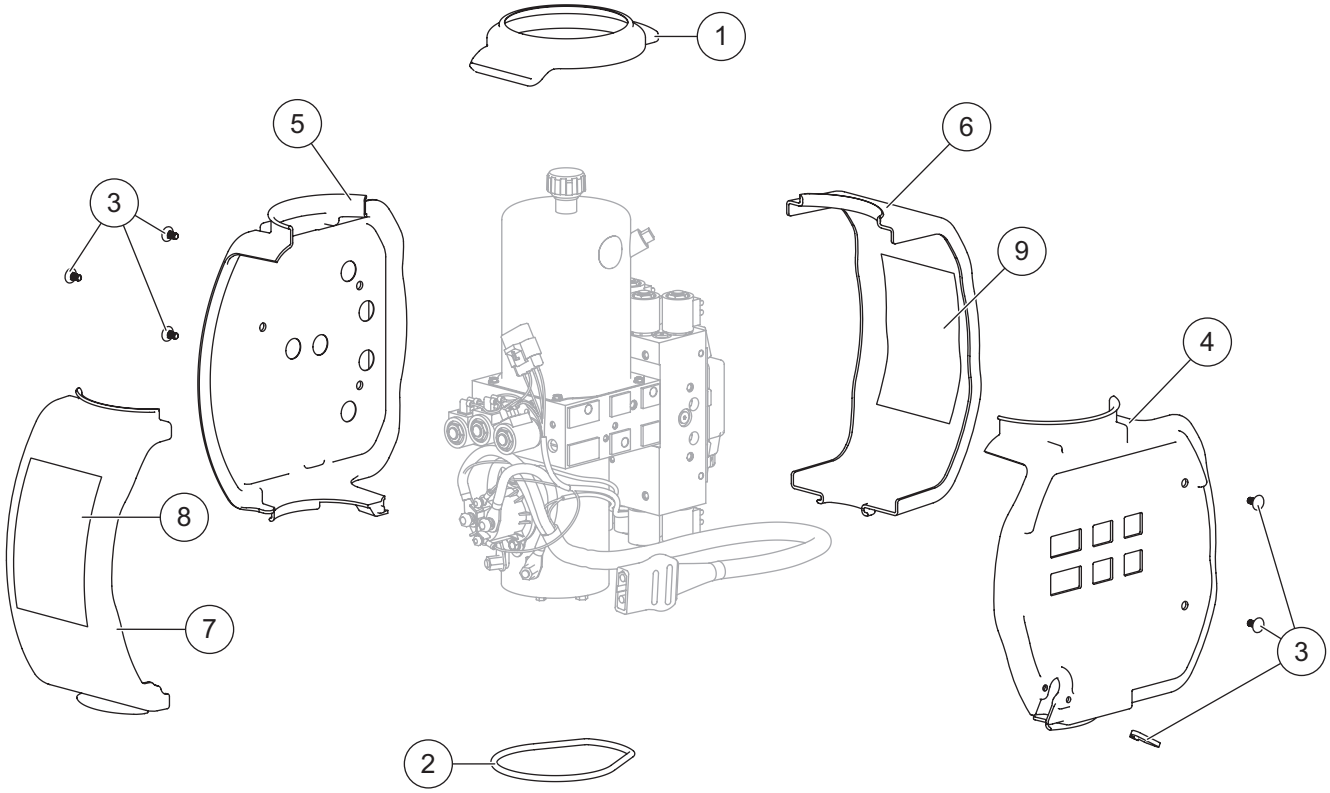

44324 Hydraulic Unit Cover Assembly							
Item	**Part**	**Qty**	**Description**	**Item**	**Part**	**Qty**	**Description**
1	44352	1	Top Retainer Ring	6	44303	1	Cover, Side 3
2	44366	1	Bottom Retainer Ring	7	44304	1	Cover, Side 4
3	44326	1	1/4-20 x 1/2 6-Lobe Round Washer-Head Screw (pkg of 5) w/8" Cable Tie	8	44310	1	Label – Information (S1–S3)
				9	44319	1	Label – Information (S4–S11)
4		1	Cover, Side 1	ns	61536	1	Cable Tie 14"
5		1	Cover, Side 2	ns	44415	1	Label – Hydraulic Unit, XtremeV™
ns = not shown							

Lift and Angle Ram Components

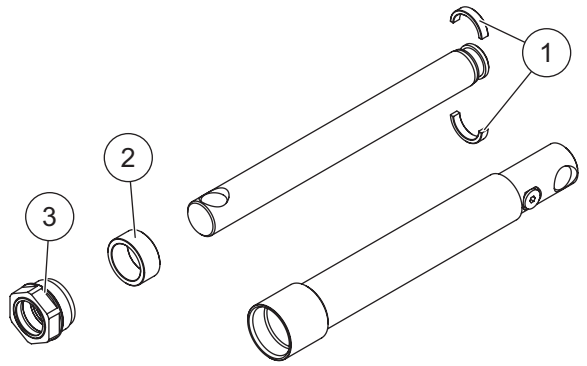

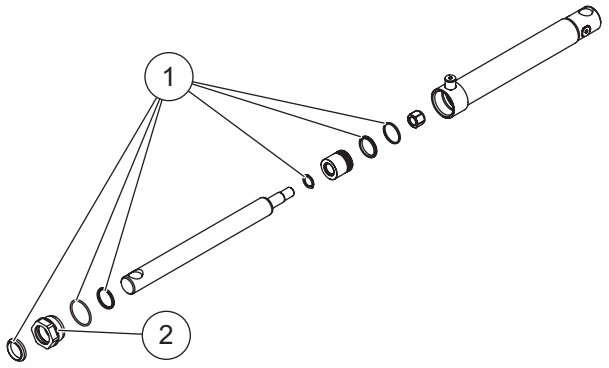

56600K Lift Ram Assembly 1-1/2 x 10			
Item	**Part**	**Qty**	**Description**
1	20118K	1	Split Bearing
2	56537	1	Spacer
3	48985	1	Gland Nut Assembly

44340 Angle Ram Assembly 1-3/4 x 11 DA			
Item	**Part**	**Qty**	**Description**
1	44342	1	Seal Kit 1-3/4 DA Ram
2	48985	1	Gland Nut Assembly

Hoses and Fittings

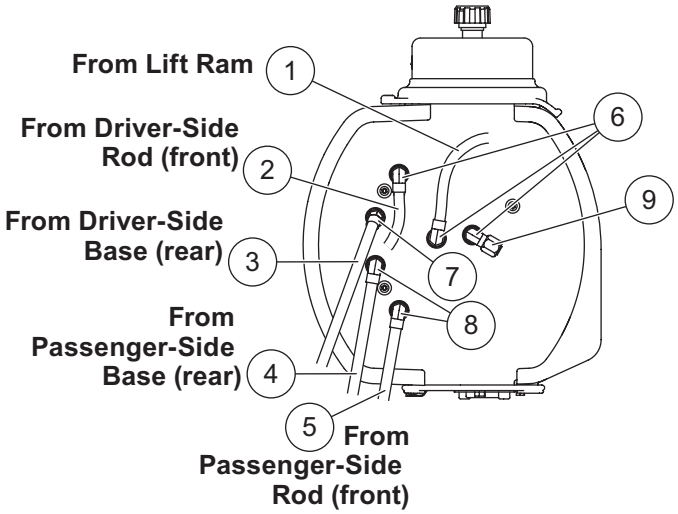

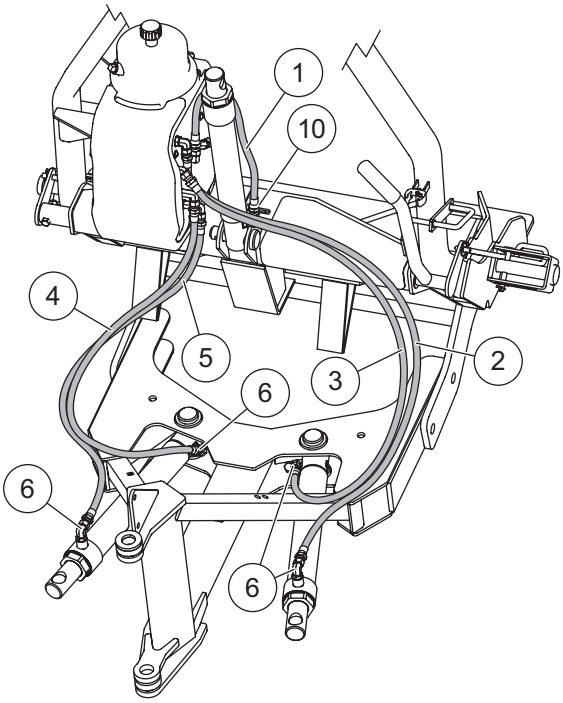

Hoses and Fittings							
Item	**Part**	**Qty**	**Description**	**Item**	**Part**	**Qty**	**Description**
1	56592	1	Hose, 1/4 x 16 w/F JIC Ends	8	44361	2	Elbow, Extra Long 90° –6 M JIC/–6 M ORB
2	56591	1	Hose, 1/4 x 42 w/F JIC Ends				
3	44348	1	Hose, 3/8 x 42 w/F JIC Ends	9	44345	1	Drain Cap, –6 F JIC
4	44315	1	Hose, 3/8 x 38 w/F JIC Ends	10	77929	1	Elbow, 90° –6 M JIC/–6 M ORB w/Screen
5	56599	1	Hose, 1/4 x 36 w/F JIC Ends				
6	56725	7	Elbow, 90° –6 M JIC/–6 M ORB	ns	56823	2	Hose Wrap, Polyethylene
7	56726	1	Elbow, 45° –6 M JIC/–6 M ORB	ns	98043	3	3/8-16 x 1 Button Cap Screw
F = Female				ns = not shown			M = Male

Electrical Components

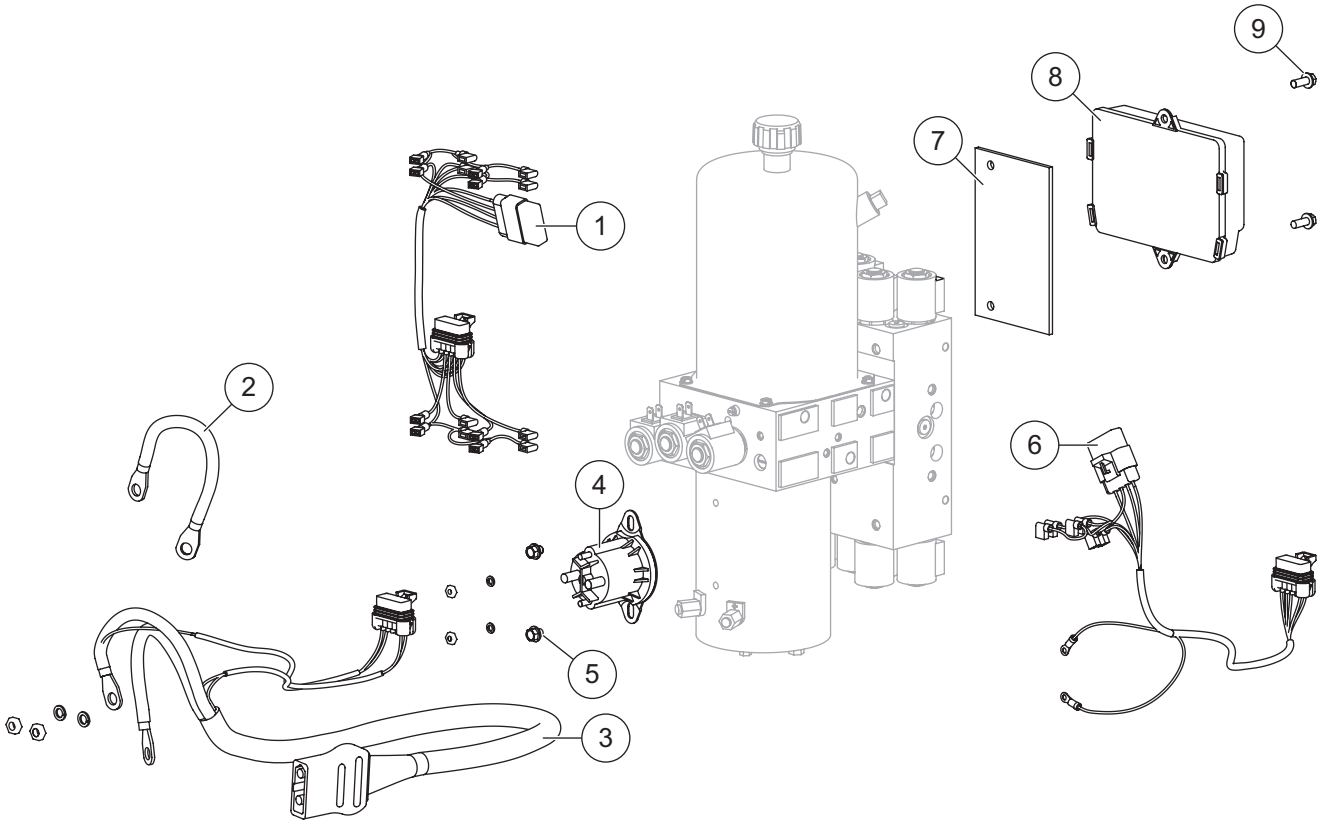

Plow-Side Electrical Components							
Item	**Part**	**Qty**	**Description**	**Item**	**Part**	**Qty**	**Description**
1	28583	1	Harness Plow Control, 8-Solenoid	8	44354-3	1	Plow Module
2	29071	1	Cable Assembly 8"	9	44355	2	1/4-20 x 5/8 Hex Washer-Head Thread-Rolling Screw
3	42015	1	Snowplow Battery Cable				
4	42901	1	Motor Relay Kit FLEET FLEX System	ns	8284K	1	Cable Boot
5	29099	2	1/4-20 x 1/4 Hex Washer-Head Thread-Rolling Screw	ns	8329K	2	Dielectric Grease (pkg of 2)
6	28581-1	1	Harness Plow Control, 3-Solenoid	ns		4	Fuse, 4A Mini Automotive-Style (for items 1 and 6)
7	44308	1	Spacer Module				
Vehicle-Side Electrical Components							
*	72527	1	Vehicle Battery Cable	ns	61548K	1	Plug Cover
*	28587	1	Vehicle Control Harness				
ns = not shown							

* For diagram see Vehicle-Side Harness Diagram.

Vehicle-Side Harness Diagram

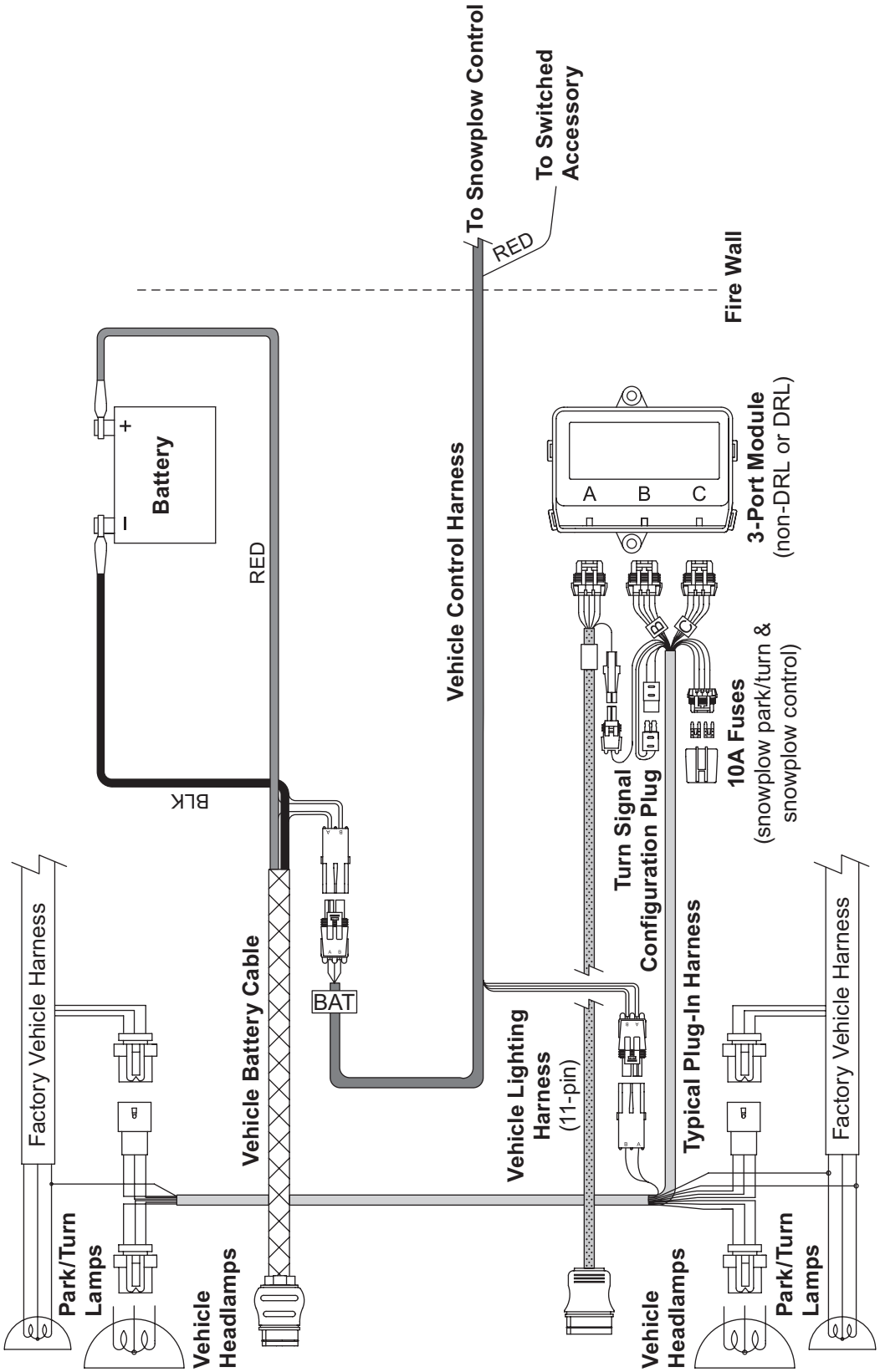

Headlamp Kit

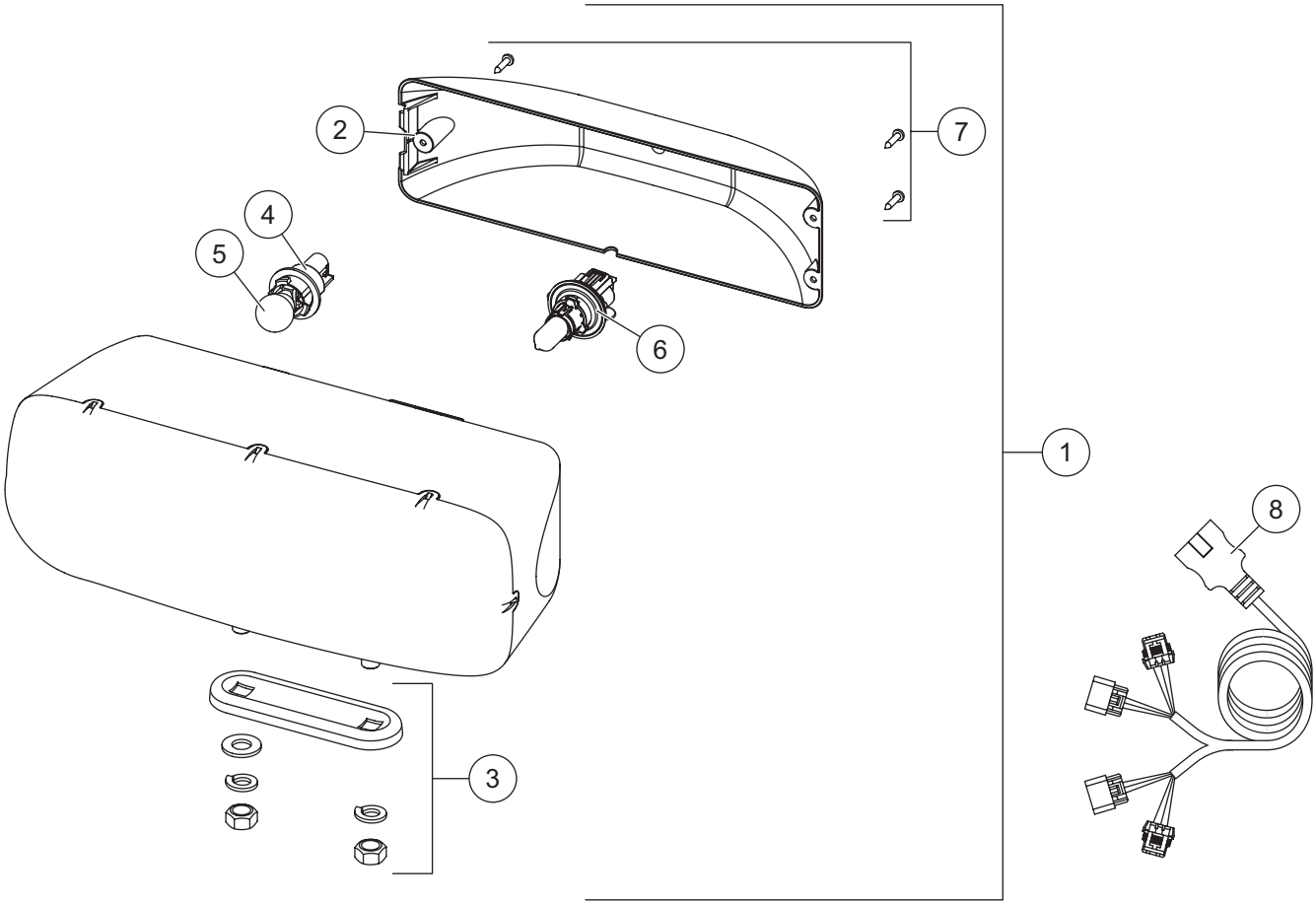

28800-1 Headlamp Kit (pair)							
Item	**Part**	**Qty**	**Description**	**Item**	**Part**	**Qty**	**Description**
1	28802-1	1	Headlamp Service Kit – PS	5		2	Park/Turn Bulb (trade no. 4157NAK)
ns	28801-1	1	Headlamp Service Kit – DS	6	28806	2	Headlamp Bulb Service Kit H13
2	28803-1	2	Rear Cover Kit (fits 2- or 3-screw)	7	28808-1	2	Cover Screws Service Kit (pkg of 3)
3	28804	2	Mounting Hardware Kit	8	28213K	1	Harness Service Kit
4	28805	2	Park/Turn Socket Service Kit				
ns = not shown							

Fisher Engineering
50 Gordon Drive
Rockland, ME 04841-2139
www.fisherplows.com

A DIVISION OF FISHER, LLC

Copyright © 2022 Douglas Dynamics, LLC. All rights reserved. This material may not be reproduced or copied, in whole or in part, in any printed, mechanical, electronic, film, or other distribution and storage media, without the written consent of Fisher Engineering. Authorization to photocopy items for internal or personal use by Fisher Engineering outlets or snowplow owner is granted.

Fisher Engineering reserves the right under its product improvement policy to change construction or design details and furnish equipment when so altered without reference to illustrations or specifications used. Fisher Engineering or the vehicle manufacturer may require or recommend optional equipment for snow removal. Do not exceed vehicle ratings with a snowplow. Fisher Engineering offers a limited warranty for all snowplows and accessories. See separately printed page for this important information. The following are registered (®) or unregistered (™) trademarks of Douglas Dynamics, LLC: FISHER®, Minute Mount® 2, SECURITY GUARD™, STORM GUARD™, XtremeV™.

Printed in U.S.A.